ROHS

http://www.smtswitch.com

NOTES:

SPECIFICATION:

1. CURRENT RATING: 5.0A MAX
2. VOLTAGE: 100 VAC
3. TEMPERATURE RANGE: -30 ˚C ~ 85 ˚C
4. CONTACT RESISTANCE: 40 MILLIONHM MAX
5. INSULATION RESISTANCE: 100 MEGOHMS MIN.
6. LNSERTION FORCE : 5N~20N
7. UNMATING FORCE: 8N~20N
8. DURABILITY: 10,000 CYCLES

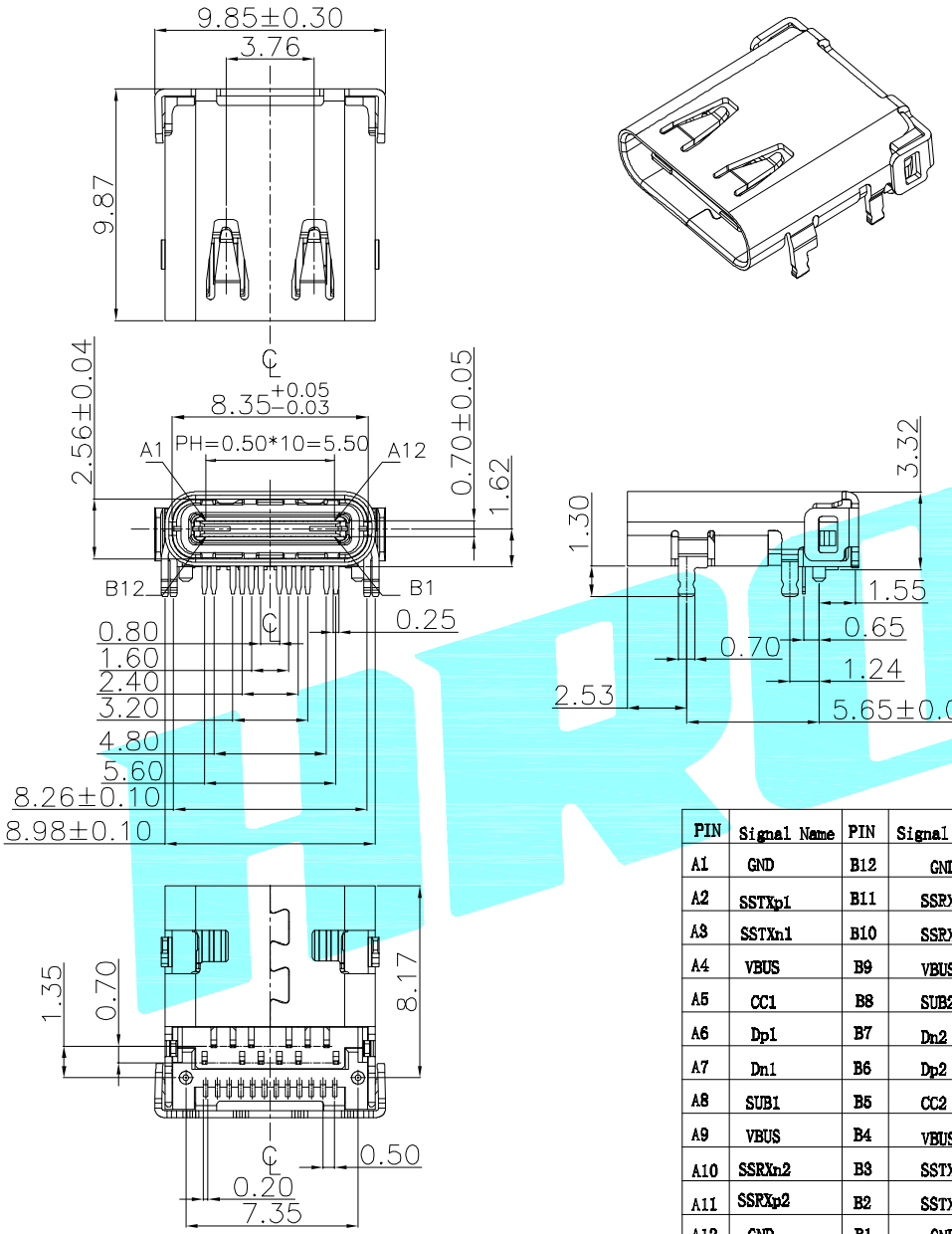

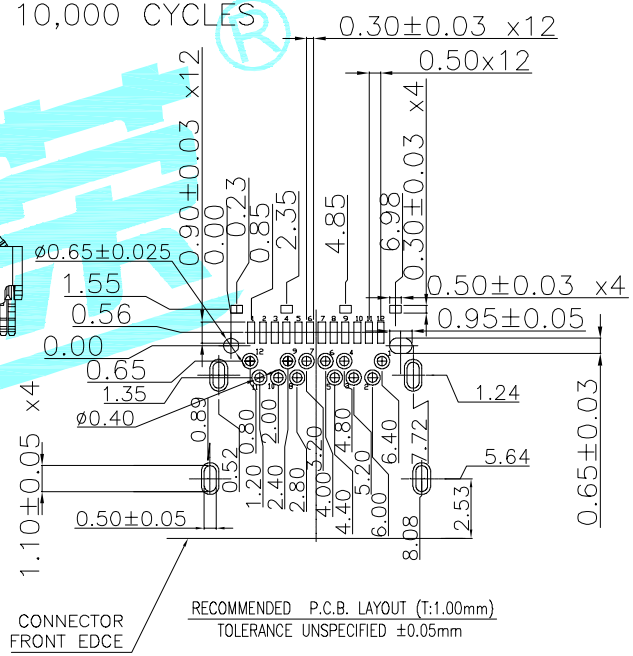

PIN	Signal Name	PIN	Signal Name
A1	GND	B12	GND
A2	SSTXp1	B11	SSRXp1
A3	SSTXn1	B10	SSRXn1
A4	VBUS	B9	VBUS
A5	CC1	B8	SUB2
A6	Dp1	B7	Dn2
A7	Dn1	B6	Dp2
A8	SUB1	B5	CC2
A9	VBUS	B4	VBUS
A10	SSRXn2	B3	SSTXn2
A11	SSRXp2	B2	SSTXp2
A12	GND	B1	GND

USB3.1(TYPE/C)母座

ITEM	PART NAME	TER'NO.	QTY.	MATERIAL	FINISHING	REMARK
④	Shielding Plate	——	1	STAINLESS STEEL	——	——
③	Shell	——	1	STAINLESS STEEL	Ni Plated	——
②	Contact	——	24	COPPER ALLOY	Au/NI Plated	——
①	Housing	——	1	LCP	Black	——

APPROVALS		DATE	HRO韩荣® ELECTRONICS CO.,LTD	
DRAWN	JKN.LU	2014.5.29		
CHECKED			TITLE:	USB CONNECTOR
APPROVALS			PART NO.	TYPE-C-31-M-04

TOLERANCES ARE			ANGLE	UNIT: mm	SCALE: 1:1	PROJ:
	30~以上	±0.30				
	10~30	±0.25				
	5~10	±0.20	±2°	DRAWING NO.	——	SHEET 1 OF 1
	~ 5	±0.15				

ECN NO.	REV.	DATE.	DESCRIPTION.	CHANGE.	CHECK.	APPRO.
——	A	——	NEW	——	——	——