ROHS

http://www.smtswitch.com

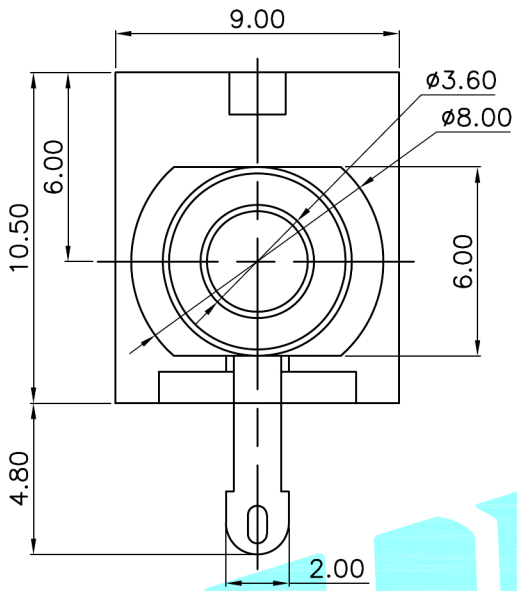

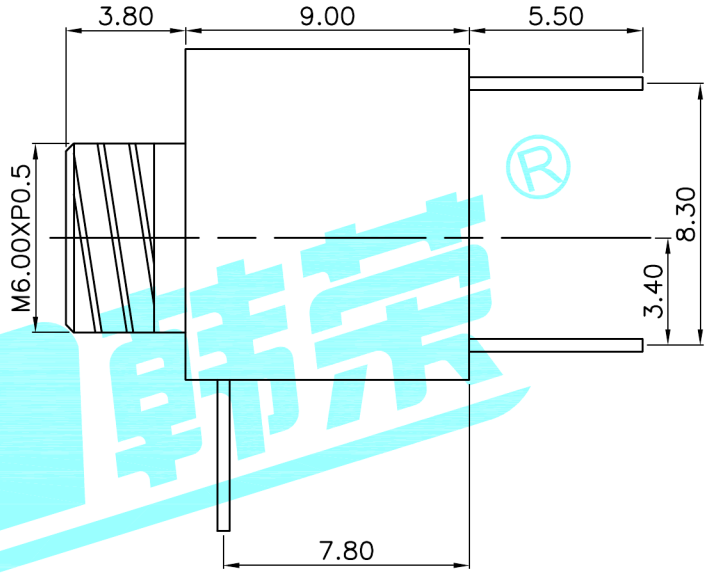

Rating:0.5A 30V DC
Contact Resistance:100 mΩ Max.
Operating temperature:−20℃~70℃
Operating force:3−20N
Operating Life:5,000cycles

Model NO	PJ−3111
Schematic	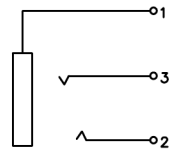

ITEM	PART NAME	TER'NO.	QTY.	MATERIAL	FINISHING	REMARK
②	Terminal	——	3	Phosphor bronze	Au Plating	——
①	Housing	——	1	Nylon	Black	——

APPROVALS		DATE	HRO韩荣® ELECTRONICS CO.,LTD
DRAWN	J.X.Zhang	2013/11/11	
CHECKED			TITLE: PHONE JACKES
APPROVALS			PART NO. PJ−3111

TOLERANCES ARE			ANGLE	UNIT: mm	SCALE: 1:1	PROJ:
	30~以上	±0.30				
	10~30	±0.20				
	5~10	±0.15	±2°	DRAWING NO. ——		SHEET 1 OF 1
	~ 5	±0.10				

ECN NO.	REV.	DATE.	DESCRIPTION.	CHANGE.	CHECK.	APPRO.
——	A	——	NEW	——	——	——