ROHS

http://www.smtswitch.com

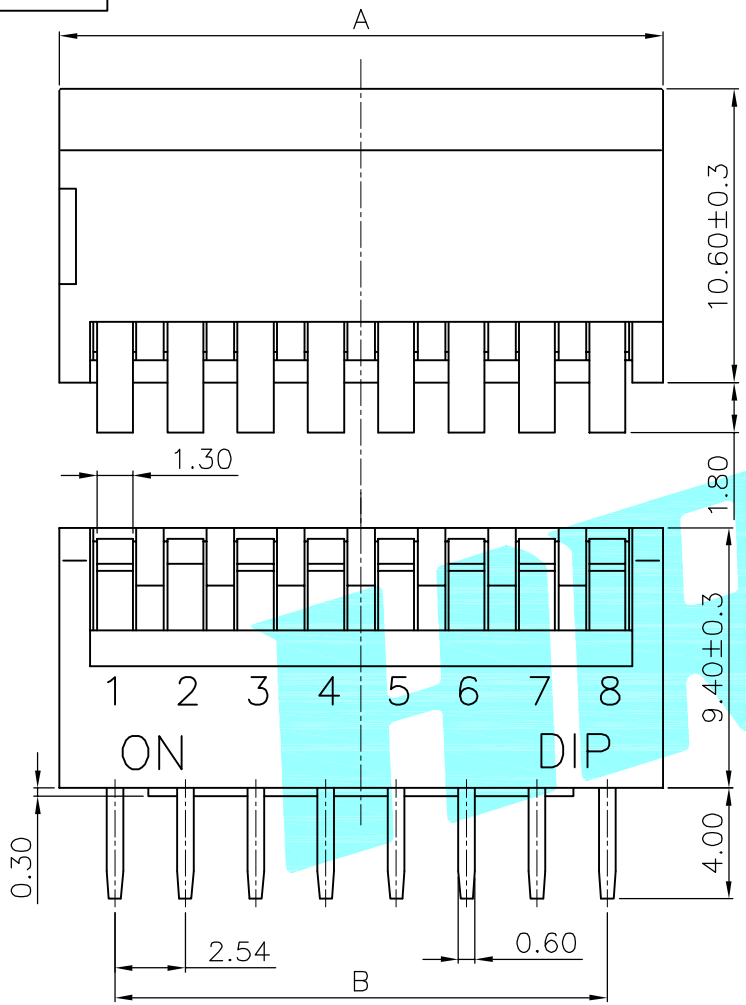

NOTE:
1.Rating: 24V 25mA AC
2.Insulation Resistance: ≥100 MΩ
3.Withstand voltage:AC 500V 1Minute
4.Operating Force Range: 400gf Max
5.Mechanical Life:3,000 Cycles
6.Operating Temperature range −20°~+70°C
7.Ambient Humidity used: ≤85%RH

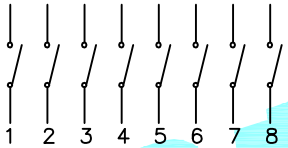

Circuit Diagram

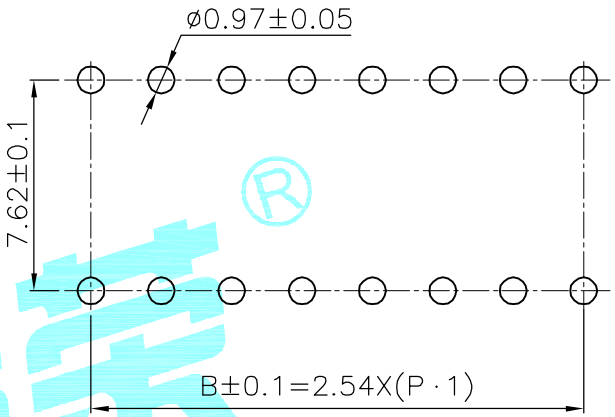

PCB Layout(Pattern Side)

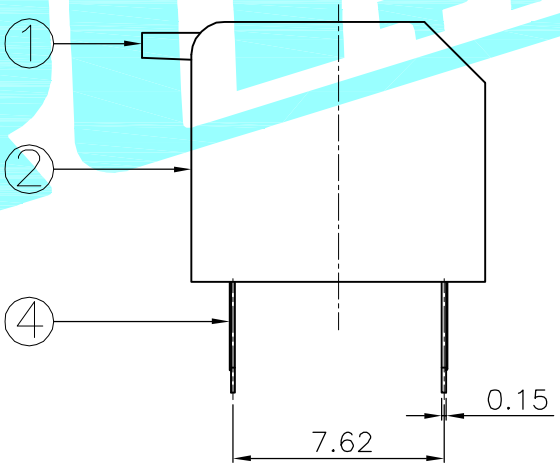

凸柄(P)

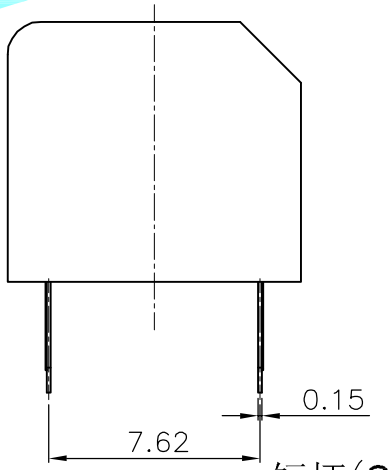

短柄(S)

Position(位数)		2P	3P	4P	5P	6P	7P	8P	9P	10P	12P
DIM.A(长度)		6.54	9.08	11.62	14.16	16.70	19.24	21.78	24.32	26.86	31.94
DIM.B(长度)		2.54	5.08	7.62	10.16	12.70	15.24	17.78	20.32	22.86	27.94
PART NO. 盖子/红色(R)	凸柄(P)	DP−02RP	DP−03RP	DP−04RP	DP−05RP	DP−06RP	DP−07RP	DP−08RP	DP−09RP	DP−10RP	DP−12RP
	短柄(S)	DP−02RS	DP−03RS	DP−04RS	DP−05RS	DP−06RS	DP−07RS	DP−08RS	DP−09RS	DP−10RS	DP−12RS
PART NO. 盖子/蓝色(B)	凸柄(P)	DP−02BP	DP−03BP	DP−04BP	DP−05BP	DP−06BP	DP−07BP	DP−08BP	DP−09BP	DP−10BP	DP−12BP
	短柄(S)	DP−02BS	DP−03BS	DP−04BS	DP−05BS	DP−06BS	DP−07BS	DP−08BS	DP−09BS	DP−10BS	DP−12BS

ITEM	PART NAME	TER'NO.	QTY.	MATERIAL	FINISHING	REMARK
⑤	Gum Water	——		Epikote	Black	——
④	Terminal	——		Phosphor bronze	Au Plating	——
③	Base	——	1	PBT	Black	——
②	Cover	——	1	PBT	Red/Blue	——
①	Keystoke	——	1	PBT	White	——

APPROVALS		DATE
DRAWN	J.X.Zhang	2013/11/8
CHECKED		
APPROVALS		

HRO韩荣® ELECTRONICS CO.,LTD

TITLE:	MULTIFUNCTIONAL SWITCHES
PART NO.	DP−□□□□
UNIT: mm	SCALE: 1:1
DRAWING NO.	——
PROJ:	SHEET 1 OF 1

TOLERANCES ARE			ANGLE
30~以上	±0.30		
10~30	±0.20		
5~10	±0.15		±2°
~ 5	±0.10		

ECN NO.	REV.	DATE.	DESCRIPTION.	CHANGE.	CHECK.	APPRO.
——	A	——	NEW	——	——	——